REVISIONS				
ZONE	REV	DESCRIPTION	DATE	APPROVED
	C	REDRAWN	06MAY97	

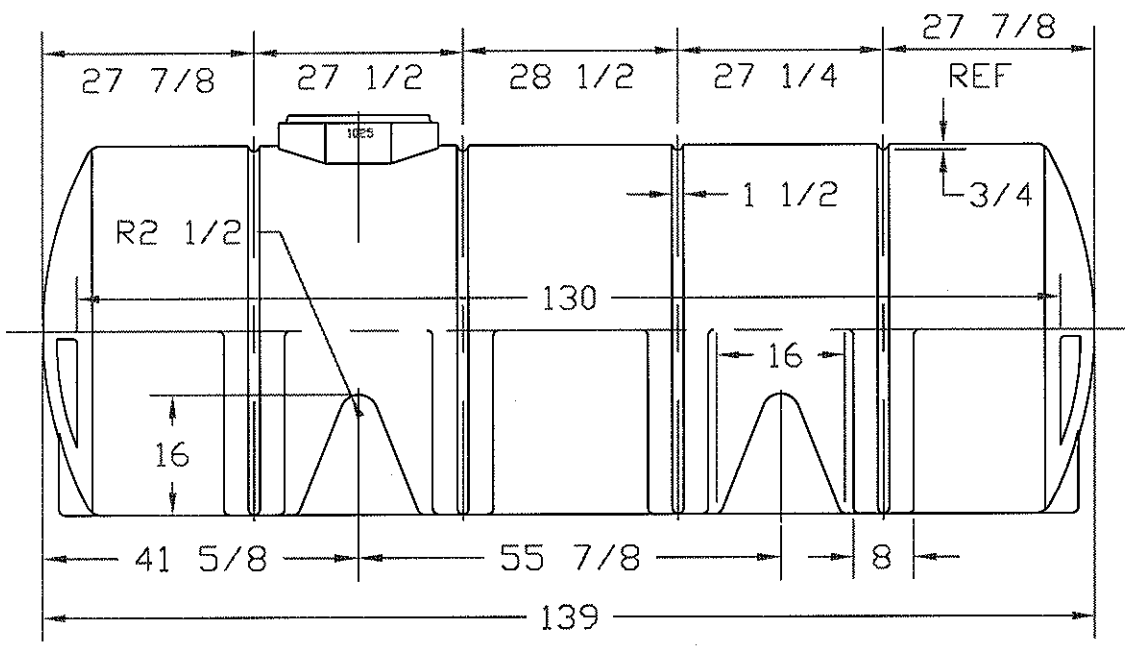

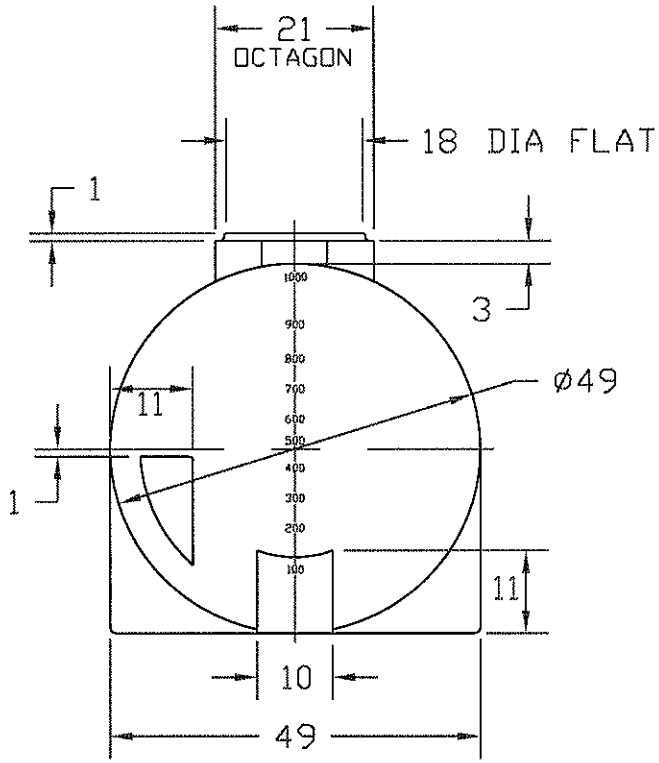

NORWESCO
ST. BONIFACIUS, MN

1025 GALLON HORIZONTAL STORAGE TANK

JTP 06MAY97	SIZE A	FSCM NO.	DWG NO.	REV C
	SCALE 1/24		SHEET	