ASC# 28487

REV	DESCRIPTION	SER NO.	BY	CHK'D	APPR'D	ENG. RELEASE DATE
C	REDRAWN TO PRO/E FORMAT C) P702315 WAS P702212.	06-226	OTL	WIE	-	12-01-06

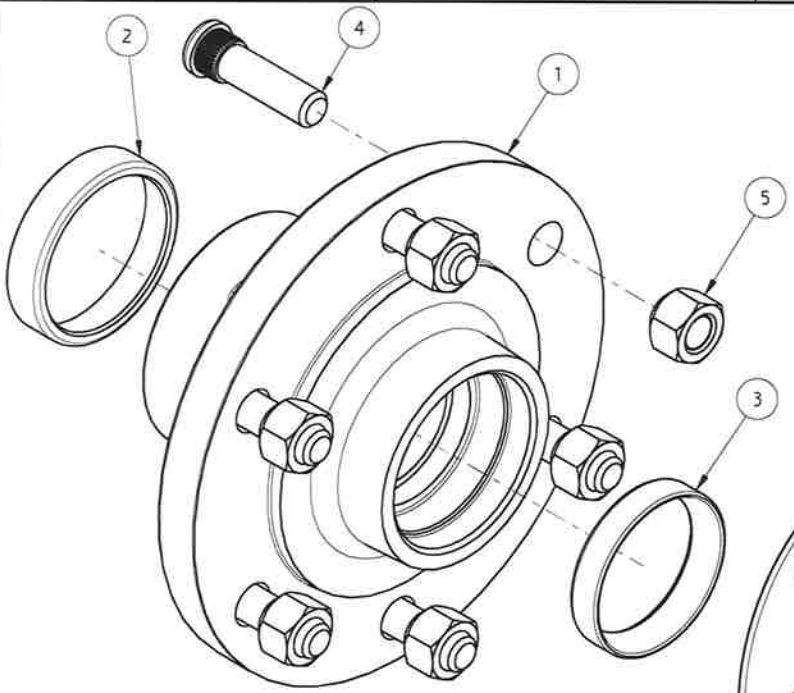

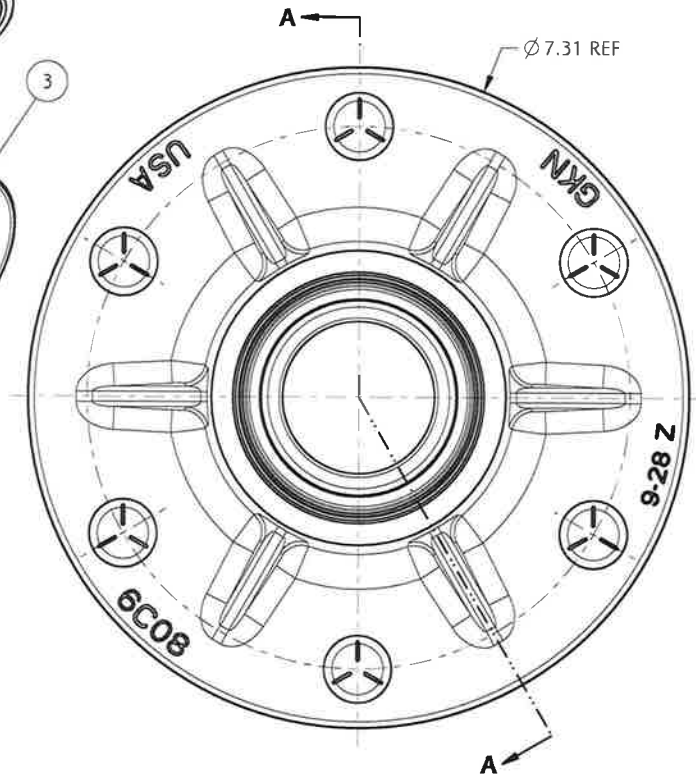

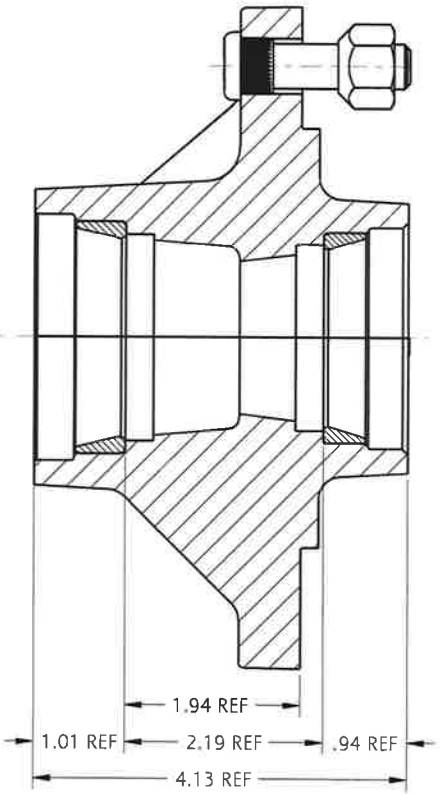

SECTION A-A

BILL OF MATERIAL

ID	QTY.	PART NO.	DESCRIPTION
1	1	L306400-6	HUB MACHINING
2	1	P702315	BEARING CUP LM29710 - PEER
3	1	P702203	BEARING CUP LM67010 - PEER
4	6	P151401	BOLT STUD 1/2-20 UNF X 1-7/8, GRADE 5, (BLACK)
5	6	P201602	NUT WHEEL 1/2-20 UNF, ZP

C

DIMENSIONS ARE FOR REFERENCE ONLY	ORIGINAL SER	XX-XXX	CUSTOMER	-	-	WEIGHT	13.73 LBS
	DRAWN BY	KM	03-23-83	NO OF BOLTS	BOLT CIRCLE	PILOT DIA	CAPACITY
	CHECKED BY	JH	03-23-83	6	6.00"[152.4]	4.62"[117.4]	3000 LBS
	APPROVED BY	JH	03-23-83	MATERIAL: SAE G-3000 GRAY IRON			
	ENGINEERING RELEASE DATE		N/A				
DIMENSION INCHES [mm]	The subject matter of this document is the sole property of GKN Armstrong Wheels, Inc. of Armstrong, Iowa. It is to be used only as authorized in writing. This document, with all copies and associated images must be returned upon request.			HUB SUB ASSEMBLY			
	GKN Armstrong Wheels Armstrong, IA 50514			L306300-6		REV	C
						VERSION	-