POS	QTY	PART NO.	DESCRIPTION
1	1	D379187	DISC 6-6-4.633
2	1	R231130Z1	RIM 14 X 8KB

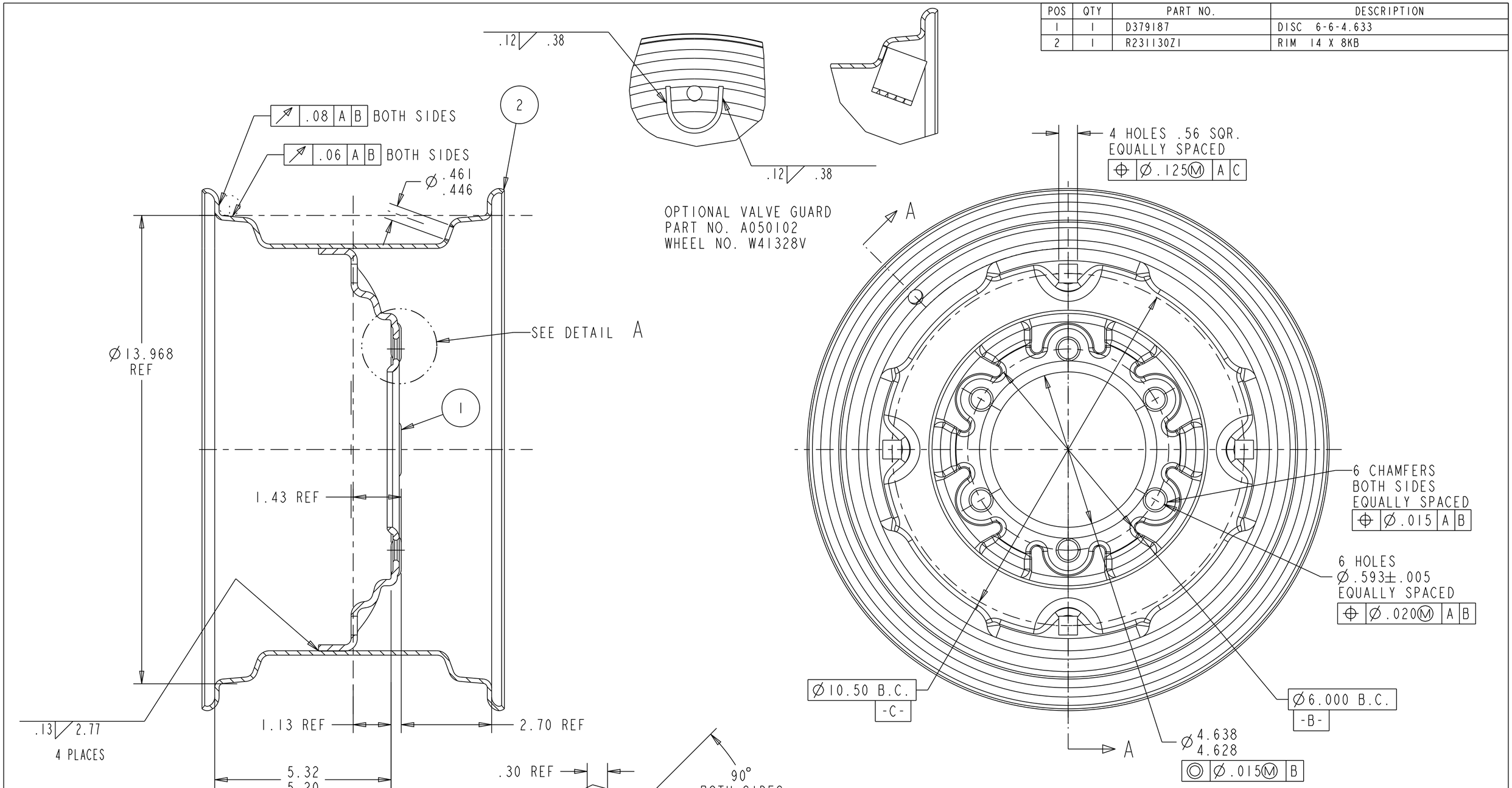

ISSUE	DRAWN	DATE	APPROVE	ECN NO	CHANGE
F	KJ	12/13/06	ML	06-806	F1-FORMAT REVISED & REDRAWN IN PRO/E

CAPACITY LB [KG]	SPEED MPH [KM/H]	APPLICATION
2800 [1270]	20 [32]	IMPLEMENT

REFERENCES -
PROTECTIVE FINISH AS REQ'D
MATERIAL -
DIMENSION INCH [mm]
PROJECTION
CAD-SYSTEM PRO/E

ENQUIRY NO.
WEIGHT 23.1 LB
CUSTOMER VARIOUS
CUSTOMER NO. N/A
REPLACED BY -
SUPERSEDES -
REVISION F

This document, the information contained in this document and its subject matter are the property of the GKN Wheels Division of GKN plc. The information contained in this document is disclosed in strict confidence and it shall not be used, disclosed to others or reproduced without the express written consent of the GKN Wheels Division of GKN plc. If consent is given for reproduction of this document in whole or in part, this notice shall appear on any such reproduction. This document (with any and all reproductions and associated images) must be returned to the GKN Wheels Division of GKN plc immediately upon request.

GKN WHEELS TELFORD
TELFORD, SHROPSHIRE
ENGLAND
GKN WHEELS NAGBØL
LUNDERSKOV DENMARK
GKN WHEELS FAD SPA
CARPENEDOLO ITALY
GKN WHEELS ARMSTRONG
IOWA USA

GLOBAL PART NO.

WHEEL 14 X 8KB

NO HLS	BOLT CIRCLE	PILOT DIA	HOLE SIZE\TYPE
6	6.000	4.633	0.593 E

OFFSET +1.13

DRAWING NO. W41328