REVISIONS				
ZONE	REV	DESCRIPTION	DATE	APPROVED
	A	ADDED GAL MARKS	29MAR96	

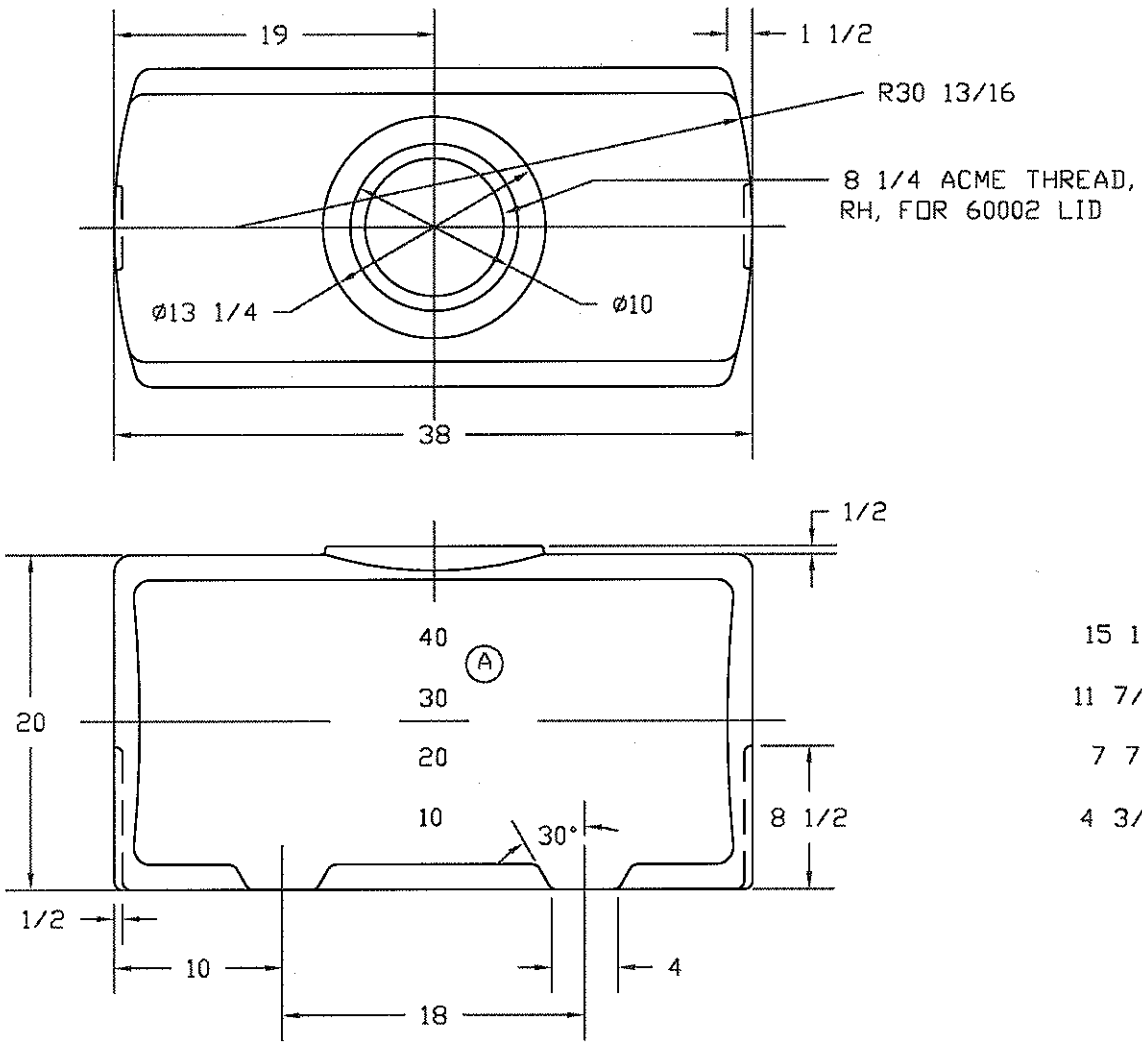

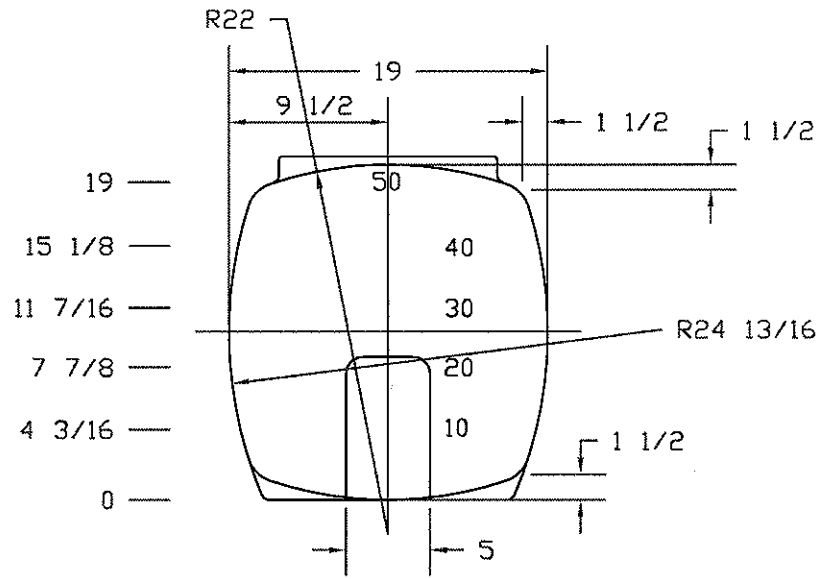

NORWESCO
ST. BONIFACIUS, MN

50 GALLON PCO TANK

JTP 14JUL95	SIZE B	FSCM NO.	DWG NO.	REV
	SCALE 1/8		SHEET	